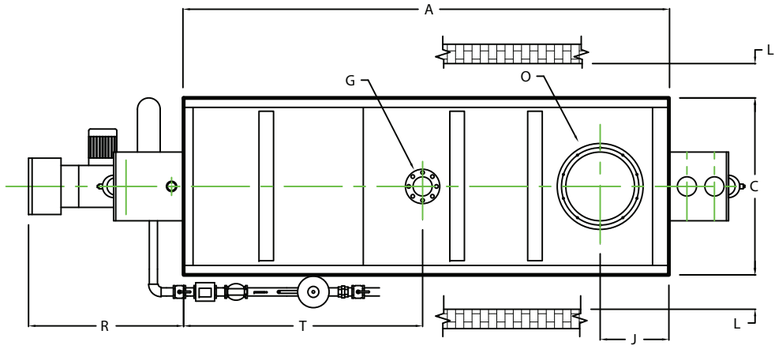

TOP VIEW

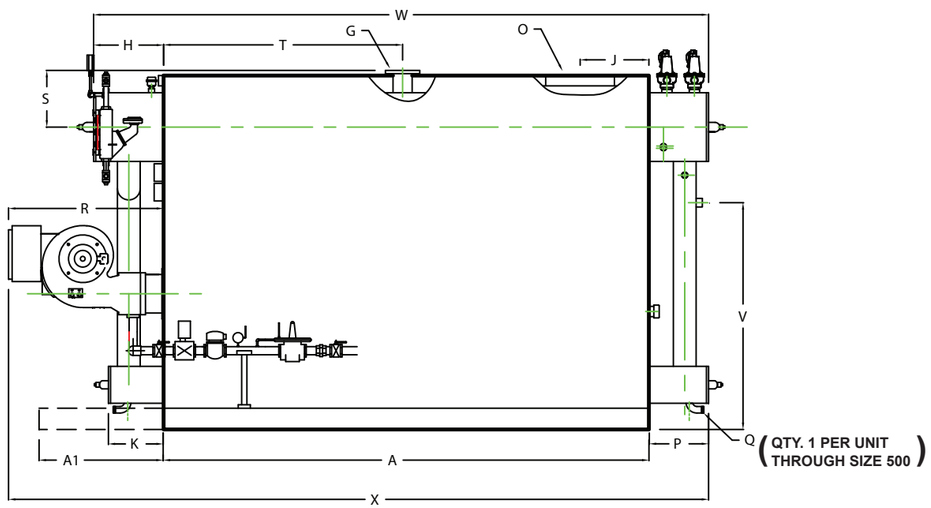

SIDE VIEW

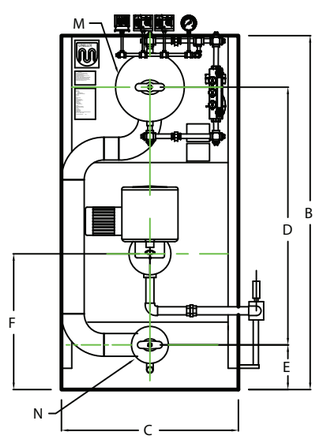

FRONT VIEW

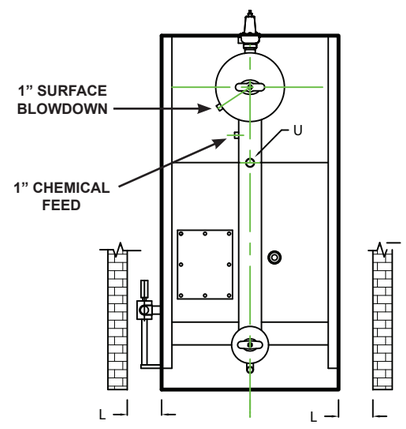

REAR VIEW

HIGH PRESSURE STEAM BOILER

DIMENSIONS

	BOILER MODEL-HS	100	150	200	250	300	350	400	500	600	700	800
A	LENGTH OF BASE	51 1/4	63 1/4	63 1/4	72 1/4	72 1/4	78 1/4	87 1/4	99 1/4	111 1/4	120 1/2	120 5/8
A1	LENGTH OF SUPPORT FROM BASE	-	-	-	-	-	-	-	-	-	-	-
B	HEIGHT	76 9/16	76 9/16	83 9/16	83 9/16	88 9/16	88 9/16	88 9/16	92 13/16	92 13/16	95 13/16	102 13/16
C	WIDTH OF BASE	35 1/2	35 1/2	39 1/2	39 1/2	43 1/2	43 1/2	43 1/2	45 1/2	45 1/2	47 1/2	51 1/2
D	CTR. LOWER DRUM TO CTR. UPPER DRUM	54	54	59	59	64	64	64	67	67	70	75
E	CENTER OF LOWER DRUM TO BOTTOM	9 9/16	9 9/16	9 9/16	9 9/16	9 9/16	9 9/16	9 9/16	10 13/16	10 13/16	10 13/16	12 13/16
F	CENTER OF BURNER OPENING TO BOTTOM	25 7/8	25 7/8	27 7/8	27 7/8	29 3/8	29 3/8	29 3/8	33	33	34 5/16	38 5/16
G	OUTLET FLANGE, NPS, CLASS 300	1 1/2	2	2 1/2	2 1/2	3	3	3	3	4	4	4
H	DRUM CLEARANCE FROM TOP, FRONT	19 9/16	19 5/8	19 7/8	19 1/2	19 1/2	19 7/8	20 3/8	20 7/8	20 7/8	20 7/8	20 7/8
J	CENTER OF FLUE GAS OUTLET TO REAR	14	14	15	15	16	16	17	17	18	19	19
K	DRUM CLEARANCE FROM BASE, FRONT	13 3/4	13 3/4	13 3/4	14 1/4	14 1/4	14 1/4	14 1/4	15 1/2	15 1/2	15 1/2	15 1/2
L	TUBE REMOVAL CLEARANCE FROM BASE	18	18	22	22	26	26	26	28	28	30	34
M	UPPER DRUM O.D., NPS	16	16	20	20	20	20	20	20	20	20	20
N	LOWER DRUM O.D., NPS	8 5/8	8 5/8	8 5/8	8 5/8	8 5/8	8 5/8	8 5/8	10 3/4	10 3/4	10 3/4	10 3/4
O	FLUE GAS OUTLET, I.D.	8	8	10	10	12	12	14	14	16	18	18
P	DRUM CLEARANCE FROM BASE, REAR	13	13	13	14	14	14	14	15 5/16	15 5/16	16 3/8	16 3/8
Q	BLOWDOWN, NPT	1 1/2	1 1/2	1 1/2	1 1/2	1 1/2	1 1/2	1 1/2	1 1/2	1 1/2	1 1/2	1 1/2
R	BURNER DIMENSION (EST)	34	34	34	38	38	38	38	38	38	46	46
S	CTR. OF UPPER DRUM TO TOP OF OUT LET	14 1/2	14 1/2	16 1/2	16 1/2	16 1/2	16 1/2	16 1/2	16 1/2	16 1/2	16 1/2	16 1/2
T	CTR. OF OUTLET TO ENCLOSURE FRONT	24 7/16	30 1/2	30 1/2	35 1/16	35 1/16	38 1/16	42 9/16	45 5/8	54 5/8	59 3/16	59 3/16
U	INLET, 3000 PSI ASA HALF COUPLING	1	1	1	1 1/4	1 1/4	1 1/4	1 1/4	1 1/4	1 1/4	1 1/4	1 1/2
V	FEED WATER INLET FROM BASE	43 9/16	43 9/16	46 9/16	46 9/16	51 9/16	51 9/16	51 9/16	55 9/16	55 9/16	58 13/16	65 13/16
W	OVERALL BOILER LENGTH	83 13/16	95 7/8	96 1/8	105 3/4	105 3/4	112 1/8	121 5/8	135 7/16	147 7/16	157 3/4	157 7/8
X	OVERALL BOILER LENGTH WITH BURNER	98 1/4	110 1/4	110 1/4	124 1/4	124 1/4	130 1/4	139 1/4	152 9/16	164 9/16	182 7/8	183

	BOILER MODEL-HS	900	1000	1200	1400	1600	1800	2000	2500	2900	3000	3500
A	LENGTH OF BASE	129 5/8	141 5/8	159 5/8	174 7/8	186 7/8	186 3/4	195 7/8	203 31/32	219 1/8	237 7/8	266
A1	LENGTH OF SUPPORT FROM BASE	-	-	-	-	-	-	-	-	-	TBA	TBA
B	HEIGHT	102 13/16	102 13/16	106 13/16	106 13/16	106 13/16	115 5/16	115 5/16	136 13/16	142 13/16	158 3/8	167 3/8
C	WIDTH OF BASE	51 1/2	51 1/2	55 1/2	55 1/2	59 1/2	65 1/2	71 1/2	84	84	102	102
D	CTR. LOWER DRUM TO CTR. UPPER DRUM	75	75	79	79	79	84 1/2	84 1/2	102	108	118	127
E	CENTER OF LOWER DRUM TO BOTTOM	12 13/16	12 13/16	12 13/16	12 13/16	12 13/16	13 13/16	13 13/16	13 13/16	13 13/16	17 3/8	17 3/8
F	CENTER OF BURNER OPENING TO BOTTOM	38 5/16	38 5/16	40 5/16	40 5/16	40 5/16	42 5/8	42 5/8	50 3/8	52 5/8	58 3/8	60 3/8
G	OUTLET FLANGE, NPS, CLASS 300	4	6	6	6	6	6	8	8	8	8	8
H	DRUM CLEARANCE FROM TOP, FRONT	20 7/8	20 7/8	20 7/8	20 7/8	20 7/8	22 1/8	22 1/8	26	26	27 1/2	27 1/2
J	CENTER OF FLUE GAS OUTLET TO REAR	20	20	21	22	23	23	23	28	30	28	29
K	DRUM CLEARANCE FROM BASE, FRONT	16	16	16	16	16	21 3/8	21 3/8	22 1/8	22 1/8	26 1/2	26 1/2
L	TUBE REMOVAL CLEARANCE FROM BASE	34	34	38	38	42	48	54	70	70	76	76
M	UPPER DRUM O.D., NPS	20	20	20	20	20	24	24	26	26	32	32
N	LOWER DRUM O.D., NPS	10 3/4	10 3/4	10 3/4	10 3/4	10 3/4	12 3/4	12 3/4	12 3/4	12 3/4	16	16
O	FLUE GAS OUTLET, I.D.	20	20	22	24	24	26	26	28	30	30	32
P	DRUM CLEARANCE FROM BASE, REAR	16 3/8	17 3/8	17 3/8	16 3/8	16 3/8	18 3/8	18 3/8	22 1/8	22 1/8	23	23
Q	BLOWDOWN, NPT	1 1/2	1 1/2	2	2	2	2	2	2	2	2	2
R	BURNER DIMENSION (EST)	46	46	46	46	46	46	46	46	46	46	46
S	CTR. OF UPPER DRUM TO TOP OF OUT LET	16 1/2	16 1/2	16 1/2	16 1/2	16 1/2	18 1/2	18 1/2	23 1/4	23 1/4	24 1/2	24 1/2
T	CTR. OF OUTLET TO ENCLOSURE FRONT	63 11/16	69 11/16	78 3/4	86 5/16	92 5/16	92 5/16	96 7/8	101	108 5/8	117 11/16	131 3/4
U	INLET, 3000 PSI ASA HALF COUPLING	1 1/2	1 1/2	2	2	2	2	2	3	3	3	3
V	FEED WATER INLET FROM BASE	65 13/16	65 13/16	69 13/16	69 13/16	69 13/16	74 5/16	74 5/16	90 13/16	96 13/16	107 3/8	116 3/8
W	OVERALL BOILER LENGTH	166 7/8	179 7/8	197 7/8	212 1/8	224 1/8	227 1/4	236 3/8	252 3/32	267 1/4	288 3/8	316 1/2
X	OVERALL BOILER LENGTH WITH BURNER	192	205	223	237 1/4	249 1/4	251 1/8	260 1/4	272 3/32	287 1/4	306 7/8	335

*RECOMMENDED CLEARANCE

Note: Burner dimension "R" is based upon approximate lengths of combustion equipment. Actual dimensions for "R" and "X" may vary accordingly.

ALL DIMENSIONS SHOWN IN INCHES

Note: Dimensions subject to change without notice. Consult factory for certified dimensions.

UNILUX

The Ultimate Heat

Specification Data

UNILUX

MULTIPASS FLEXIBLE WATERTUBE BOILERS

HIGH PRESSURE STEAM BOILERS

Unilux Advanced Manufacturing, LLC
30 Commerce Park Drive
Niskayuna NY 12309
518.344.7490

Fax: (518) 344-7495
E-mail: info@uniluxam.com
Web Site: www.uniluxam.com

"From commercial comfort to industrial process"

UNILUX "HS" BOILER CAPACITIES:

BOILER MODEL HS	MAXIMUM FUEL INPUT BTU/HR IN THOUSANDS	HEAT OUTPUT AT BOILER OUTPUT BTU/HR IN THOUSANDS	OUTPUT STEAM LBS/HR AT 125 PSIG	APPROX. BOILER HORSE POWER	SHIPPING WEIGHT LBS	OPERATING WEIGHT LBS	OPERATING LEVEL WATER VOLUME U.S. GALLONS
100	1250	1013	1000	30.5	4170	4640	56
150	1750	1418	1400	42.5	4665	5235	69
200	2200	1782	1760	53	5530	6210	82
250	2750	2228	2200	66.5	6200	7000	97
300	3000	2430	2400	72.5	6700	7560	103
350	3750	3038	3000	91	7090	8020	112
400	4300	3463	3440	104	7700	8735	125
500	5400	4374	4320	130.5	9300	10710	168.5
600	6250	5063	5000	151	10200	11760	188
700	7235	5860	5787	175	11280	13040	210
800	8270	6699	6615	200	12785	14645	224
900	9300	7533	7439	225	13600	15655	246
1000	10330	8367	8262	250	14850	17095	268.5
1200	12400	10044	9918	300	17250	19905	320
1400	14470	11720	11574	350	18590	21480	348
1600	16530	13390	13220	400	20720	23940	385
1800	18600	15066	14878	450	23500	27545	485
2000	20670	16743	16533	500	26100	30555	535
2500	25000	20250	19997	605	31800	38300	780
2900	29000	23490	23196	702	34900	42300	888
3000	34000	27540	27194	823	49050	59780	1285
3500	38000	30780	30395	919.5	55000	66270	1350

ORDER NUMBER PROCEDURE: Example – ZF 300HSG

- 300 — BOILER MODEL
- HS — WATER (W) LOW PRESSURE STEAM (LS) HIGH PRESSURE STEAM (HS)
- G — NAT. GAS, MIXED OR LP (G) NO. 2 OR LIGHTER OILS (L) COMB. GAS/LIGHT OIL (LG)
- ZW – Welded Boiler Tube
- ZF – Ferrule Boiler Tube

SPECIFICATIONS ARE SUBJECT TO CHANGE WITHOUT NOTICE. DIMENSIONS MUST BE CONFIRMED FOR CONSTRUCTION.

UNILUX REPRESENTATIVE:

STANDARD EQUIPMENT:
• STEAM PRESSURE GAUGE
• LWCO • RELIEF VALVES • BURNER OPERATING AND SAFETY PRESSURE CONTROLS • FEED WATER PUMP/VALVE CONTROL

ALL BURNER EQUIPMENT UL, CSA APPROVED